PROCESS SENSORS
CORPORATION

3310A22010

Air purge unit for pyrometers of series 40/44

Connector for hoses with 4mm inner diameter

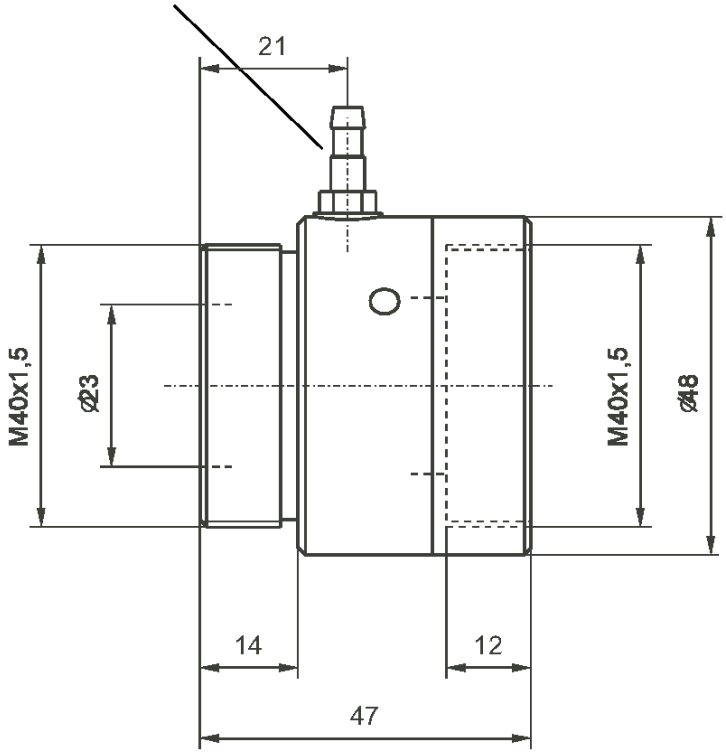

Air:
dry air, oil and dust free
air pressure: 0.1 ... 0.5 bar
air volume: max. 1.5 m³/h

Weight: 0.2 kg
Material: stainless steel

Process Sensors Corporation 113 Cedar Street S-1 Milford MA 01757
Process Sensors Corporation (IR Temp Division) 787 Susquehanna Avenue Franklin Lakes, NJ 07417
Phone: (201) 485-8773
www.processsensorsIR.com
IRtemp@processsensors.com